032.0	0002	0010.0	1 of 1	Residential
Map	Block	Lot	CARD	ARLINGTON

	Total Card	/	Total Parcel
APPRAISED:	937,600	/	937,600
USE VALUE:	937,600	/	937,600
ASSESSED:	937,600	/	937,600

PROPERTY LOCATION

No	Alt No	Direction/Street/City
18		PALMER ST, ARLINGTON

OWNERSHIP

Unit #:

Owner 1:	ARCHAMBEAULT JAMES H--ETAL
Owner 2:	ARCHAMBEAULT JANE B
Owner 3:	
Street 1:	40 BLAKE ROAD
Street 2:	
Twn/City:	LEXINGTON
St/Prov:	MA Cntry Own Occ: N
Postal:	02420 Type:

PREVIOUS OWNER

Owner 1:	
Owner 2:	
Street 1:	
Twn/City:	
St/Prov:	Cntry
Postal:	

NARRATIVE DESCRIPTION

This parcel contains .14 Sq. Ft. of land mainly classified as Two Family with a Multi-Conver Building built about 1880, having primarily Aluminum Exterior and 2304 Square Feet, with 2 Units, 1 Bath, 1 3/4 Bath, 0 HalfBath, 13 Rooms, and 4 Bdrms.

OTHER ASSESSMENTS

Code	Descrip/No	Amount	Com. Int

PROPERTY FACTORS

Item	Code	Description	%	Item	Code	Description
Z	R2	TWO FAMIL	100	water		
o				Sewer		
n				Electri		
Census:				Exmpt		
Flood Haz:						
D				Topo	1	Level
s				Street		
t				Gas:		

IN PROCESS APPRAISAL SUMMARY

Use Code	Land Size	Building Value	Yard Items	Land Value	Total Value
104	6103.000	455,100		482,500	937,600
Total Card	0.140	455,100		482,500	937,600
Total Parcel	0.140	455,100		482,500	937,600

Source: Market Adj Cost | Total Value per SQ unit /Card: 406.94 | /Parcel: 406.94

Legal Description

Entered Lot Size	
Total Land:	
Land Unit Type:	

User Acct	22308
GIS Ref	
GIS Ref	
Insp Date	10/07/17

!2669!

PREVIOUS ASSESSMENT

Parcel ID 032.0-0002-0010.0

Tax Yr	Use	Cat	Bldg Value	Yrd Items	Land Size	Land Value	Total Value	Asses'd Value	Notes	Date
2022	104	FV	455,100	0	6,103.	482,500	937,600		Year end	12/23/2021
2021	104	FV	433,400	0	6,103.	482,500	915,900		Year End Roll	12/10/2020
2020	104	FV	433,400	0	6,103.	482,500	915,900	915,900	Year End Roll	12/18/2019
2019	104	FV	358,400	0	6,103.	512,600	871,000	871,000	Year End Roll	1/3/2019
2018	104	FV	358,400	0	6,103.	373,900	732,300	732,300	Year End Roll	12/20/2017
2017	104	FV	315,100	0	6,103.	325,700	640,800	640,800	Year End Roll	1/3/2017
2016	104	FV	315,100	0	6,103.	277,400	592,500	592,500	Year End	1/4/2016
2015	104	FV	263,400	0	6,103.	271,400	534,800	534,800	Year End Roll	12/11/2014

PRINT

Date	Time
12/29/21	21:50:59

LAST REV

Date	Time
08/03/18	08:53:20

danam

SALES INFORMATION

TAX DISTRICT

PAT ACCT. 2669

Grantor	Legal Ref	Type	Date	Sale Code	Sale Price	V	Tst	Verif	Notes
	14624-161		6/1/1982		57,500	No	No		Y

USER DEFINED

Prior Id # 1:	22308
Prior Id # 2:	
Prior Id # 3:	
Prior Id # 1:	
Prior Id # 2:	
Prior Id # 3:	
Prior Id # 1:	
Prior Id # 2:	
Prior Id # 3:	
ASR Map:	
Fact Dist:	
Reval Dist:	
Year:	
LandReason:	
BldReason:	
CivilDistrict:	
Ratio:	

BUILDING PERMITS

Date	Number	Descrip	Amount	C/O	Last Visit	Fed Code	F. Descrip	Comment
6/11/2018	762	Insulate	5,600	C				
3/16/2018	276	Inter Fi	20,000	C				
5/10/2016	600	Re-Roof	5,000					roof repairs

ACTIVITY INFORMATION

Date	Result	By	Name
10/7/2017	MEAS&NOTICE	HS	Hanne S
3/31/2009	Inspected	189	PATRIOT
4/13/2000	Inspected	276	PATRIOT
2/23/2000	Measured	264	PATRIOT
3/1/1989		PM	Peter M

Sign: VERIFICATION OF VISIT NOT DATA __/__/__

LAND SECTION (First 7 lines only)

Use Code	Description	LUC Fact	No of Units	Depth / PriceUnits	Unit Type	Land Type	LT Factor	Base Value	Unit Price	Adj	Neigh	Neigh Influ	Neigh Mod	Infl 1	%	Infl 2	%	Infl 3	%	Appraised Value	Alt Class	%	Spec Land	J Code	Fact	Use Value	Notes
104	Two Family		6103		Sq. Ft.	Site		0	80.	0.99	1									482,474						482,500	

Total AC/HA:	0.14011	Total SF/SM:	6103	Parcel LUC:	104	Two Family	Prime NB Desc	ARLINGTON	Total:	482,474	Spl Credit		Total: 482,500

Disclaimer: This Information is believed to be correct but is subject to change and is not warranteed.

EXTERIOR INFORMATION

Type:	12 - Multi-Conver		
Sty Ht:	2A - 2 Sty +Attic		
(Liv) Units:	2	Total:	2
Foundation:	3 - BrickorStone		
Frame:	1 - Wood		
Prime Wall:	3 - Aluminum		
Sec Wall:			%
Roof Struct:	1 - Gable		
Roof Cover:	1 - Asphalt Shgl		
Color:	GREEN		
View / Desir:			

BATH FEATURES

Full Bath	1	Rating:	Average
A Bath:		Rating:	
3/4 Bath:	1	Rating:	Good
A 3QBth		Rating:	
1/2 Bath:		Rating:	
A HBth:		Rating:	
OthrFix:		Rating:	

OTHER FEATURES

Kits:	2	Rating:	Good
A Kits:		Rating:	
Frpl:	1	Rating:	Average
WSFlue:		Rating:	

COMMENTS

WET BMT.

RESIDENTIAL GRID

1st Res Grid	Desc:	Line 1	# Units	1

Level	FY	LR	DR	D	K	FR	RR	BR	FB	HB	L	O
Other												
Upper												
Lvl 2												
Lvl 1												
Lower												
Totals	RMs:	13	BRs:	4	Baths:	1	HB					

SKETCH

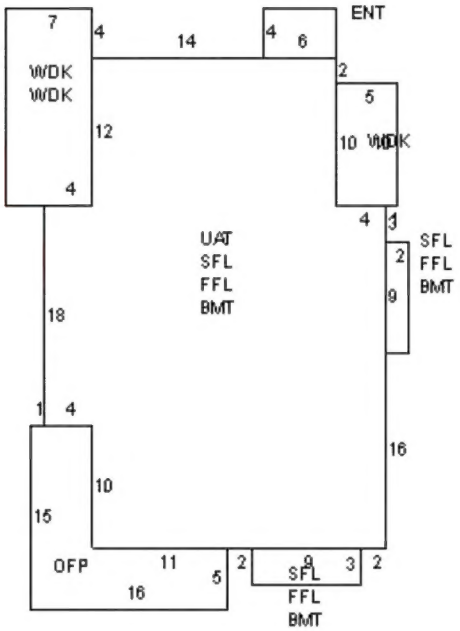

GENERAL INFORMATION

Grade:	C - Average		
Year Blt:	1880	Eff Yr Blt:	
Alt LUC:		Alt %:	
Jurisdict:		Fact:	.
Const Mod:			
Lump Sum Adj:			

CONDO INFORMATION

Location:	
Total Units:	
Floor:	
% Own:	
Name:	

REMODELING

Exterior:	
Interior:	
Additions:	
Kitchen:	
Baths:	
Plumbing:	
Electric:	
Heating:	
General:	

RES BREAKDOWN

No Unit	RMS	BRS	FL
1	5	2	
1	8	2	
Totals			
2	13	4	

INTERIOR INFORMATION

Avg Ht/FL:	STD		
Prim Int Wal	2 - Plaster		
Sec Int Wall:			%
Partition:	T - Typical		
Prim Floors:	3 - Hardwood		
Sec Floors:	4 - Carpet	20	%
Bsmnt Flr:	12 - Concrete		
Subfloor:			
Bsmnt Gar:			
Electric:	3 - Typical		
Insulation:	2 - Typical		
Int vs Ext:	S		
Heat Fuel:	1 - Oil		
Heat Type:	1 - Forced H/Air		
# Heat Sys:	2		
% Heated:	100	% AC:	
Solar HW:	NO	Central Vac:	NO
% Com Wal		% Sprinkled	

DEPRECIATION

Phys Cond:	AG - Avg-Good	26.	%
Functional:			%
Economic:			%
Special:			%
Override:			%
	Total:	26.4	%

CALC SUMMARY

Basic $ / SQ:	170.00
Size Adj.:	1.16020405
Const Adj.:	0.99792004
Adj $ / SQ:	196.824
Other Features:	111500
Grade Factor:	1.00
NBHD Inf:	1.00000000
NBHD Mod:	
LUC Factor:	1.00
Adj Total:	618275
Depreciation:	163225
Depreciated Total:	455051

COMPARABLE SALES

Rate	Parcel ID	Typ	Date	Sale Price

WtAv$/SQ:		AvRate:	Ind.Val

Juris. Factor:		Before Depr:	196.82
Special Features:	0	Val/Su Net:	121.01
Final Total:	455100	Val/Su SzAd	221.14

SUB AREA

Code	Description	Area - SQ	Rate - AV	Undepr Value
BMT	Basement	1,029	59.050	60,760
FFL	First Floor	1,029	196.820	202,532
SFL	Second Floor	1,029	196.820	202,532
WDK	Deck	274	9.630	2,639
UAT	Upper Attic	246	137.780	33,893
OFP	Open Porch	130	29.130	3,787
ENT	ENTRY	24	26.350	632
	Net Sketched Area:	3,761	Total:	506,775
Size Ad	2058	Gross Area	4499	FinArea 2304

SUB AREA DETAIL

Sub Area	% Usbl	Descrip	% Type	Qu	# Ten
UAT	100	FLA	100	A	

MOBILE HOME

Make:		Model:		Serial #		Year:	Color:

IMAGE

AssessPro Patriot Properties, Inc

SPEC FEATURES/YARD ITEMS

PARCEL ID

032.0-0002-0010.0

Code	Description	A	Y/S	Qty	Size/Dim	Qual	Con	Year	Unit Price	D/S	Dep	LUC	Fact	NB Fa	Appr Value	JCod	JFact	Juris. Value

More:	N	Total Yard Items:		Total Special Featues:	Total: